电涌保护器模组 SPD-M
Surge Protective Device Module

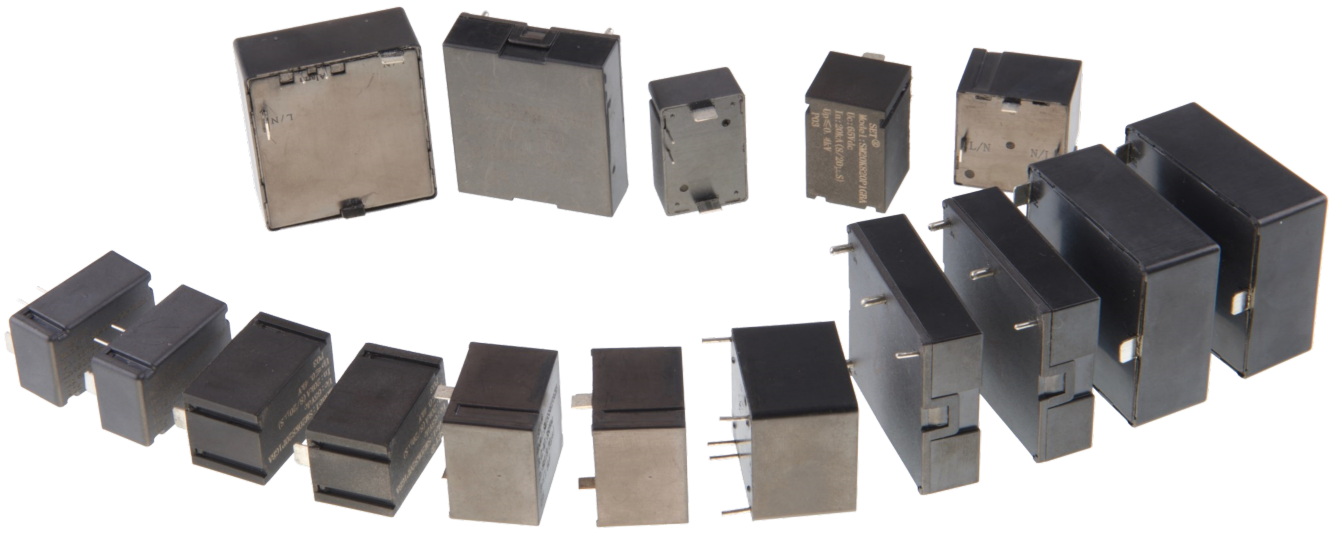

产品描述 Description

电涌保护模组是一种板载防雷模块，集成热保护、过压保护和遥信等功能。单个模组可以满足共模、差模或全模模式的防护要求。
集成化电涌保护模组，可以简化用户防雷模块的设计选型，适用于低压交流或直流供电设备电涌防护。电涌保护器模组具有占板空间小、集成度高、保护功能全等特点。

Surge protective device module (SPD-M) is an onboard lightning protection module that integrates functions, such as thermal protection, overvoltage protection, remote signaling and so on. A single module can meet common-mode, differential-mode or full-mode protection requirements.
SPD-M, an integrated solution, can simplify the design and selection of surge protection modules for users, and is suitable for surge protection of low-voltage AC or DC power supply equipment. SPD-M has the characteristics of small board space, high level of integration, and complete protection functions and solutions.

特性 Features

- 高可靠性 High Reliability
- 小体积 Small Size
- 满足 UL 1449 / IEC 61643-11 标准
  Comply with UL 1449 / IEC 61643-11
- 失效指示和遥信触点（可选） Failure Indication and Remote Signaling Contact (Optional)
- 差模和共模保护
  Differential-mode / Common-mode Protection

应用 Applications

- 通信设备 Telecom Equipment
- 交直流电源 AC / DC Power Supply
- 不间断电源 Uninterruptable Power Supply (UPS)
- 电涌保护器 Surge Protective Device (SPD)

+86-592-571-5838 www.SETfuse.com www.SETsafe.com E-mail : sales@SETfuse.com

厦门赛尔特电子有限公司版权所有
All Rights Reserved by Xiamen SET Electronics Co., Ltd. 2021-2023 V2.0

电涌保护器模组 SPD-M
Surge Protective Device Module

SETsafe | SETfuse

电涌保护模组特性与型号概览
Surge Protective Device Module (SPD-M) Feature & Model List Overview

额定电压 Rated Voltage U_n (V) AC		DC	9	13	13	11	13	15	最大连续工作电压 Maximum Continuous Operating Voltage U_n (V) AC	DC	型号 Model / 页码 Page
347V	400V		○	○	○	○	○	○	510		
			○	○	○	○	SM34S751P1GBB	○	460		
			○	○	○	○	○	○	420		
220 - 230V	254 - 277V		SM15S621P3*BB	○	○	○	SM34S621P1GBB	○	385		
			SM15S561P3*BB	○	○	○	SM34S561P1GBB	SM34S561P2*B#	350		
			SM15S511P3*BB	○	○	○	SM34S511P1GBB	SM34S511P2*B#	320		
			SM15S471P3*BB	○	○	○	SM34S471P1GBB	SM34S471P2*B#	300		
			○	○	○	○	SM34S431P1GBB	SM34S431P2*B#	275		
			○	○	○	○	○	○	250		
	120 - 130V		○	○	○	○	○	○	230		
			○	○	○	○	○	○	210		
			○	○	○	○	○	○	190		
			SM15S271P3*BB	○	○	○	○	SM34S271P2*B#	175		
			SM15S241P3*BB	○	○	○	SM34S241P1GBB	SM34S241P2*B#	150		
110V			SM15S221P3*BB	○	○	○	○	SM34S221P2*B#	140		
			SM15S201P3*BB	○	○	○	○	SM34S201P2*B#	130		
			○	○	○	○	○	○	115		
48V	60V		○	○	○	○	○	○	95		
		60V	○	○	SM34S121P1GBB	SM20K121P1*BA	○	○	75	100	
	36V	48V	○	○	SM34S101P1GBB	SM20K101P1*BA	○	○	60	85	
			○	○	SM34S820P1GBB	SM20K820P1*BA	○	○	50	65	
24V		24V	○	SM34S680P1GBB	○	SM20K680P1*BA	○	○	40	56	
			○	○	○	○	○	○	35	45	
			○	SM34S470P1GBB	○	○	○	○	30	38	
		标称放电电流 Nominal Discharge Current I_n (kA)	5	10	15	20					

注 Notes:
* 可能是：G或N。 * May be followed by G or N.
# 可能是：B或A。 # May be followed by B or A.

+86-592-571-5838 www.SETfuse.com www.SETsafe.com E-mail : sales@SETfuse.com

厦门赛尔特电子有限公司版权所有
All Rights Reserved by Xiamen SET Electronics Co., Ltd. 2021-2023 V2.0

电涌保护器模组 SPD-M
Surge Protective Device Module

电涌保护模组特性与型号概览
Surge Protective Device Module (SPD-M) Feature & Model List Overview

额定电压 Rated Voltage U_n (V)		最大连续工作电压 Maximum Continuous Operating Voltage U_n (V)	型号 Model 23	25	27	17	页码 Page
347V	400V	510	○	○	○	○	
		460	○	○	○	○	
		420	○	○	○	○	
220 - 230V	254 - 277V	385	SM15M277A203	SM20M230A203	SM20M230%	SM30M230%	
		350	○	○	○	○	
		320	SM15M230A203	SM20M277A203	SM08B230N203	○	
	120 - 130V	300	○	○	○	○	
		275	○	○	○	○	
		250	○	○	○	○	
		230	○	○	○	○	
		210	○	○	○	○	
		190	○	○	○	○	
		175	○	○	○	○	
		150	○	○	○	○	
110V		140	○	○	○	○	
		130	○	○	○	○	
		115	○	○	○	○	
48V	60V	95	○	○	○	○	
		75	○	○	○	○	
	36V	60	○	○	○	○	
		50	○	○	○	○	
		40	○	○	○	○	
24V		35	○	○	○	○	
		30	○	○	○	○	
AC		AC	15	20	30		

标称放电电流 Nominal Discharge Current I_n (kA)

注 Notes:
% 可能是： L205, L306 或 A404。 % May be followed by L205, L306 or A404.

+86-592-571-5838 www.SETfuse.com www.SETsafe.com E-mail : sales@SETfuse.com

厦门赛尔特电子有限公司版权所有
All Rights Reserved by Xiamen SET Electronics Co., Ltd. 2021-2023 V2.0

工作原理 Operation Principle

当电流无浪涌时，SPD-M等效于开路（阻抗＞ 100 MΩ）。
SPD-M is equivalent to open circuit when the circuit without surge (Impedance > 100 MΩ).

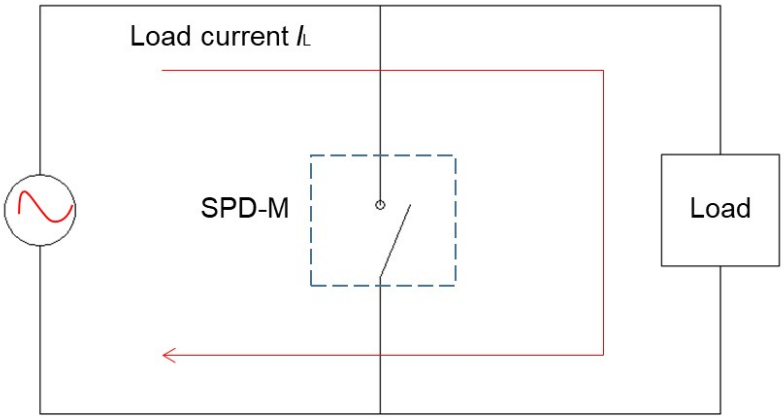

当电路有浪涌入侵时，SPD-M回路突变为低阻抗，将浪涌泄放到大地中。
When a surge invades the circuit, the SPD-M circuit mutates to a low impedance, releasing the surge current into the ground.

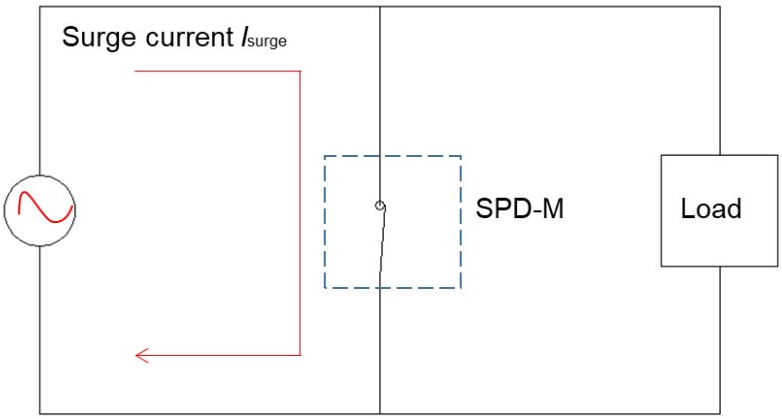

SPD-M

厦门赛尔特电子有限公司版权所有
All Rights Reserved by Xiamen SET Electronics Co., Ltd. 2021-2023 V2.0

电涌保护器模组 SPD-M
Surge Protective Device Module

型号指南 Part Numbering System

SM 34S 621 P1 G B B - 001

其他选项 Other Options

接线 Connection
A: 并联带遥信 Parallel Circuit With Remote Signal
B: 并联无遥信 Parallel Circuit Without Remote Signal

安装 Installation
B: PCB 安装 PCB Installation Mode

电路特征 Circuit Characteristic
G: 带GDT With GDT
N: 不带GDT Without GDT

保护模式数量 Quantity of Protection Mode
P1: 1个保护模式 One Protection Mode

标称压敏电压 Nominal Varistor Voltage

820	621
82×10^{0} =82 V	62×10^{1} =620 V

设计系列 Design Sequence

产品类别 Product Category

应用示例 Application Options

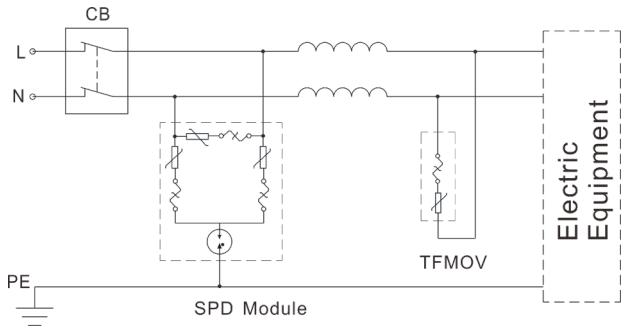

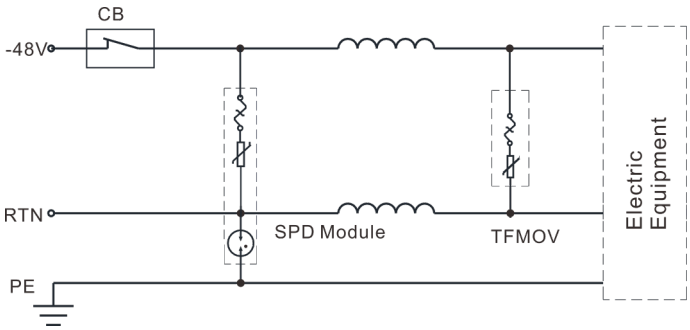

厦门赛尔特电子有限公司版权所有
All Rights Reserved by Xiamen SET Electronics Co., Ltd. 2021-2023 V2.0

术语 Glossary

项目 Item	定义 Description
U_p	**电压保护水平 Voltage Protection Level** 由于施加规定陡度的冲击电压和规定幅值及波形的冲击电流而在SPD两端之间预期出现的最大电压。 Maximum voltage to be expected at the SPD terminals due to an impulse stress with defined voltage steepness and an impulse stress with a discharge current with given amplitude and wave shape. — (IEC 61643-11)
8/20 μs	**8/20 冲击电流 Current Impulse** 视在波前时间为8μs，半峰值时间为20μs的冲击电流。 Current impulse with a nominal virtual front time of 8 μs and a nominal time to half-value of 20 μs. — (IEC 61643-11)
1.2/50 μs	**1.2/50 冲击电压 Voltage Impulse** 视在波前时间为1.2μs，半峰值时间为50μs 的冲击电压。 Voltage impulse with a nominal virtual front time of 1.2 μs and a nominal time to half-value of 50 μs. — (IEC 61643-11)
U_c	**最大持续工作电压 Maximum Continuous Operating Voltage** 可连续地施加在SPD上的最大交流电压有效值。 Maximum r.m.s. voltage, which may be continuously applied to the SPD's mode of protection. — (IEC 61643-11)
I_n	**标称放电电流 Nominal Discharge Current** 流过SPD具有8/20波形电流的峰值。 Crest value of the current through the SPD having a current waveshape of 8/20. — (IEC 61643-11)
I_{imp}	**I 类试验的冲击电流 Impulse Discharge Current for Class I Test** I_{imp}由三个参数来定义：电流峰值 I R peak R 、电荷量 Q 和比能量 W/R。 Crest value of a discharge current through the SPD with specified charge transfer Q and specified energy W/R in the specified time. — (IEC 61643-11)
I_{max}	**最大放电电流 Max. Discharge Current** 具有 8/20 波形和制造厂声称幅值的流过SPD电流的峰值。I_{max}等于或大于I_n 。 Crest value of a current through the SPD having an 8/20 waveshape and magnitude according to the manufacturers specification. I_{max} is equal to or greater than I_n. — (IEC 61643-11)
Modes of protection	**保护模式 Modes of protection** 在端子间保护保护元器件的电流路径，例如相对相、相对地、相对中线、中线对地。 An intended current path, between terminals that contains protective components, e.g. line-to-line, line-to-earth, line-to-neutral, neutral-to-earth. — (IEC 61643-11)
IP	**外壳防护等级（IP 代码） Degrees of Protection Provided by Enclosure (IP Code)** 外壳提供的防止触及危险的部件、防止外界的固体异物进入和/或防止水的进入壳内的防护程度。 Classification preceded by the symbol IP indicating the extent of protection provided by an enclosure against access to hazardous parts, against ingress of solid foreign objects and possibly harmful ingress of water.

SPD-M

厦门赛尔特电子有限公司版权所有
All Rights Reserved by Xiamen SET Electronics Co., Ltd. 2021-2023 V2.0

注意
ATTENTION

使用方法 Usage

1. 交流频率在47 Hz和63 Hz之间。
   Frequency range is from 47 Hz to 63 Hz a.c.
2. 持续施加在电涌保护模组上的电压不应超过其最大连续工作电压U_c。
   The voltage applied continuously to the SPD-M must not exceed its maximum continuous operating voltage U_c.
3. 气压在45 kPa 到106 kPa，对应海拔为+5000 m至-500 m。
   When atmosphere press is from 45 kPa to 106 kPa, the related altitude shall be from 5000 meters to - 500 meters.
4. 通电情况下请勿直接触碰本体或引脚，防止触电。
   Do not touch the product body or pins directly when power is on, to avoid electric shock.

更换 Replacement

电涌保护器模组是不可修复的产品，基于安全原因，替换时应使用同类别同型号的产品。
As SPD-M is a non-repairable product, for safety sake, please use the same type of SPD-M for replacement.

存贮 Storage

电涌保护器模组的贮存应避免高温、高湿、日光直射和腐蚀性气体的场合，避免引线氧化。产品购入后请于1年内使用完。
Do not store SPD-M at high temperature, high humidity or corrosive gas environment, to avoid oxidation of the lead wires. Use them up within 1 year after receiving the goods.

安装位置 Installation Position

勿将电涌保护器模组安装在出现剧烈振动的地方。
Do not install SPD-M to the place that may suffer severe vibration.

厦门赛尔特电子有限公司版权所有
All Rights Reserved by Xiamen SET Electronics Co., Ltd. 2021-2023 V2.0

波峰焊参数（参考） Wave Soldering Parameters (Reference)

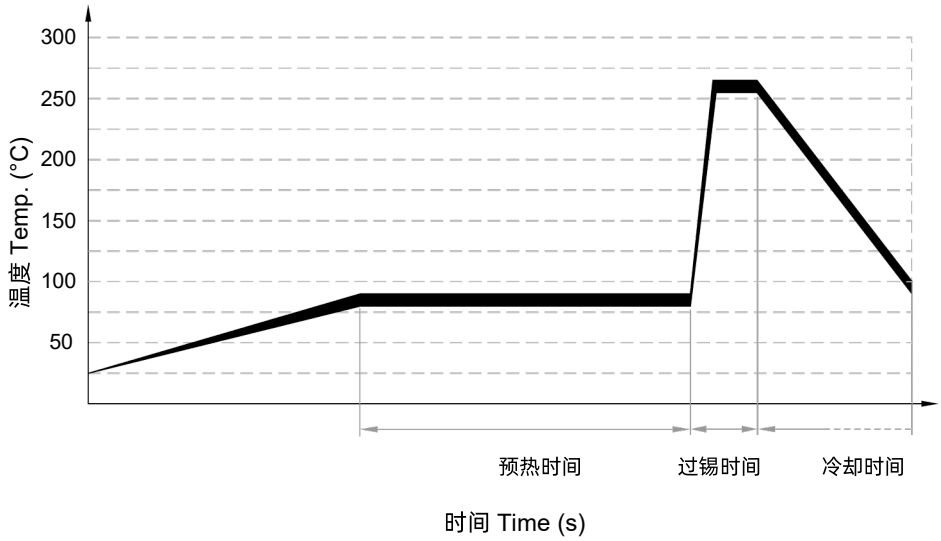

项目 Items	温度 Temp. (°C)	时间 Time (s)
预热 Preheating	≤150	60 ~ 150
过锡 Dwelling	≤260	≤10

推荐的手工焊参数 Recommended Hand-Soldering Parameters

项目 Item	条件 Condition
烙铁头温度 Iron Temperature	350 °C (Max.)
焊接时间 Soldering Time	4 seconds (Max.)
焊接点距产品底部的距离 Distance between Soldering Point and the Bottom of Product	2 mm (Min.)

认证信息 Agency Information

认证信息 Agency Information		标准 Standards	档案号 NO.	类别 Category
	UL	UL 1449 4th Edition	E322662	VZCA2
	CUL	CSA C22.2 NO.269, CSA ECN 516	E322662	VZCA8
	TUV	IEC/EN 61643-11	详见具体型号	
	CE	IEC/EN 61643-11	详见具体型号	

厦门赛尔特电子有限公司版权所有
All Rights Reserved by Xiamen SET Electronics Co., Ltd. 2021-2023 V2.0

电涌保护器模组 SPD-M
Surge Protective Device Module

SM20(30)M230A404 系列 Series

特性 Features

- 高可靠性 High Reliability
- 热保护压敏电阻 Thermally Protected MOV
- 带遥信触点 With Remote Signal Contact
- 满足 IEC/EN 61643-11 T2 标准
  Comply with IEC/EN 61643-11 T2
- 体积小，高度仅为25.5 mm
  Small Size, The Height is Only 25.5 mm

电路原理图 Schematics

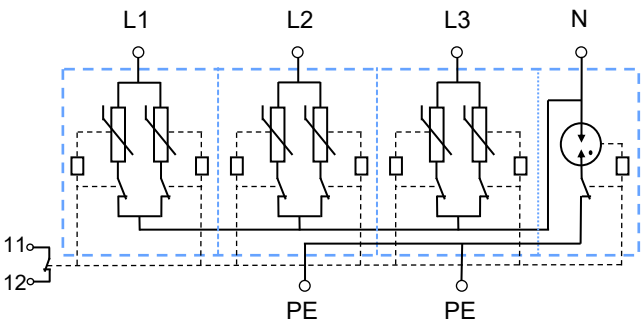

安规认证 Agency Approvals

机构 Agency	标准 Standards	档案号 No.
TÜVRheinland	EN 61643-11	R 50519879
CE	EN 61643-11	AN 02051982
环境 Environment	RoHS 2.0 & REACH	符合 Compliant

应用 Applications

- 通信设备 Telecom Equipment
- 交直流电源 AC / DC Power Supply
- 不间断电源 Uninterruptable Power Supply (UPS)
- 嵌入式电源 Embedded power supply

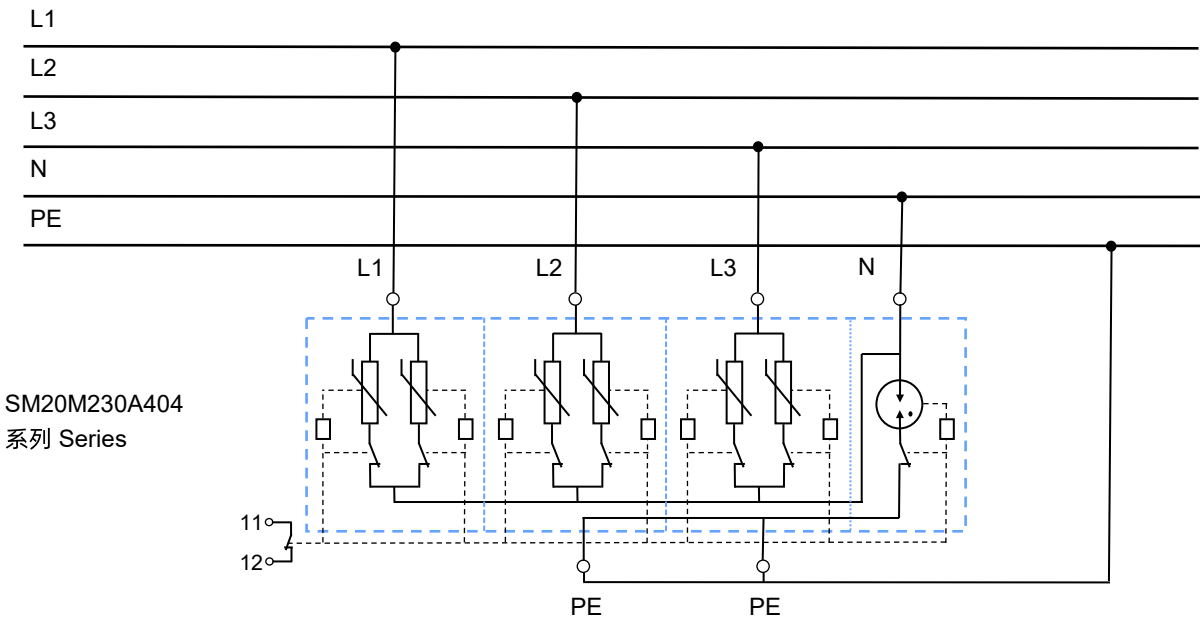

厦门赛尔特电子有限公司版权所有
All Rights Reserved by Xiamen SET Electronics Co., Ltd. 2021-2023 V2.0

尺寸 Dimensions (mm)

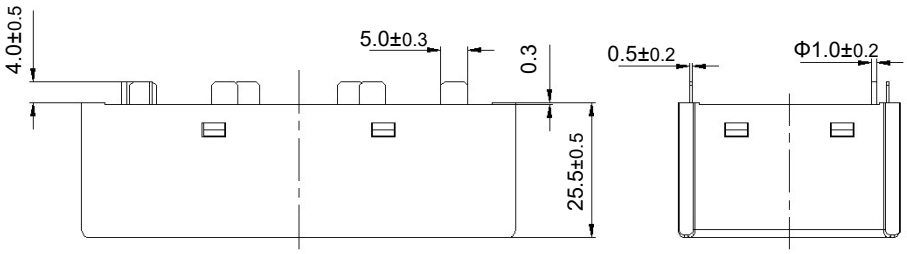

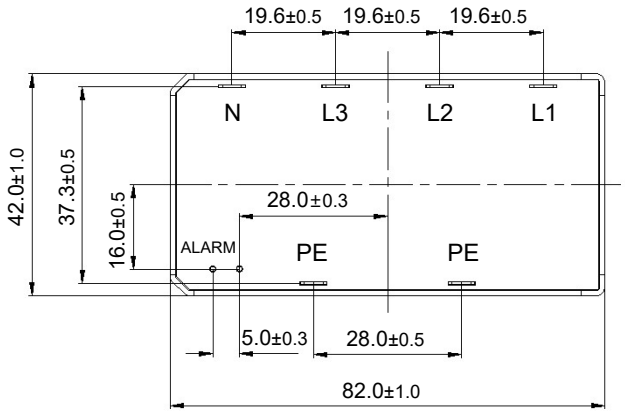

技术参数 Specifications

技术特性 Features	技术参数 Specifications	
型号 Model	SM20M230A404	SM30M230A404
标称系统电压 Nominal System Voltage (U_n)	230 / 400 VAC	230 / 400 VAC
最大连续工作电压 Maximum Continuous Operating Voltage (U_c)	L - N: 385 VAC	L - N: 385 VAC
	N - PE: 255 VAC	N - PE: 255 VAC
标称放电电流 Nominal Discharge Current (8/20 μs) (I_n)	20 kA	30 kA
最大放电电流 Maximum Discharge Current (8/20 μs) (I_{max})	40 kA	60 kA
电压保护水平 Voltage Protection Rating (U_p)	L - N: 1800 V	L - N: 2000 V
	N - PE: 1500 V	N - PE: 1500 V
保护模式 Protection Mode	3+1(L - N; N - PE)	3+1(L - N; N - PE)
告警 Alarm	遥信 Remote signal	遥信 Remote signal
最大过电流保护 Max. Main-side Overcurrent Protection	125 A gL/gG	160 A gL/gG
安装 Installation	PCB	
工作温度 Operational Temperature Range	(-40 ~ 85) °C	
标准 According to Standard	IEC/EN 61643-11 Class II	

厦门赛尔特电子有限公司版权所有
All Rights Reserved by Xiamen SET Electronics Co., Ltd. 2021-2023 V2.0